HT 2045 L

Assembly tables

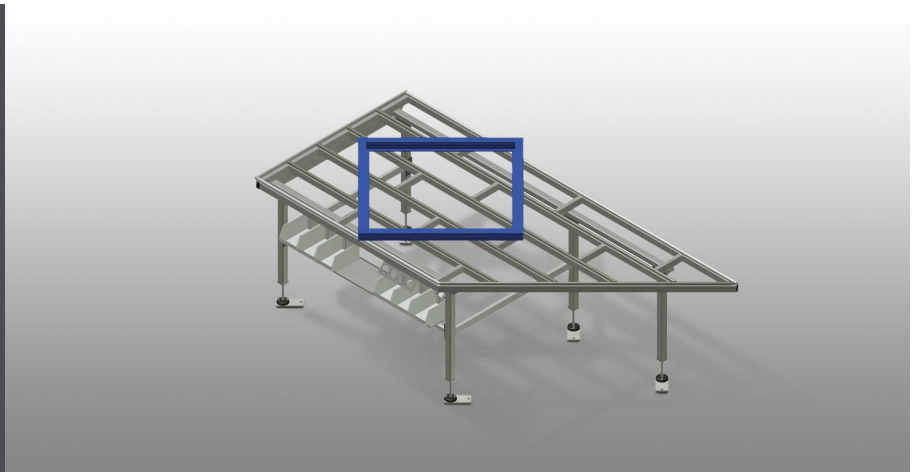

Horizontal table for all work tasks on frames and sashes. Stable steel construction. Angled work table; can be used as a pass-through in the production line or as a buffer zone. Assembly table for all work tasks on frames and sashes. Table supporting surface with plastic slide bars. Storage tray for setting down tools and accessories. Adjustable height. Simple installation with a modular system design.

Voilàp S.p.A.
Via Archimede, 10
41019 - Limidi di Soliera (MO)
ITALY

Tel 059 895411
Fax: 059 859404
P.IVA e C.F. 02057270361
info@somecopvc.com
www.somecopvc.com

The right to make technical alterations is reserved.

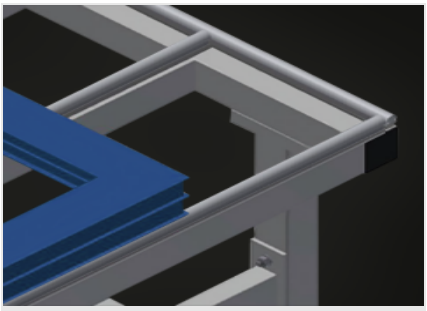

Supporting surfaces

Supporting surfaces with plastic slide bars

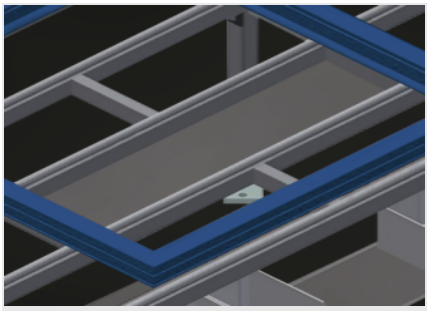

Storage tray

Storage tray for setting down tools and accessories

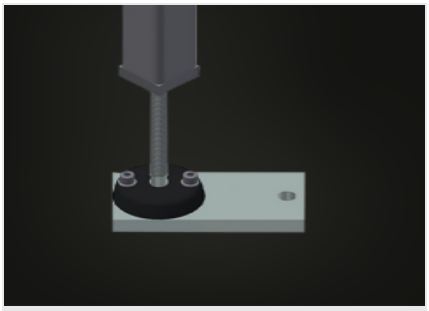

Height adjustment

Adjustable height; working height can be set to 850 – 1,000 mm by means of adjustable feet

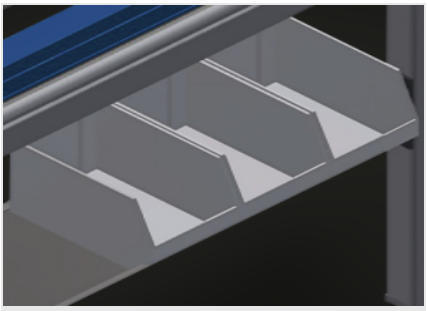

Storage area (Optional)

Storage area with 6 plastic trays for small accessories, hardware and screws

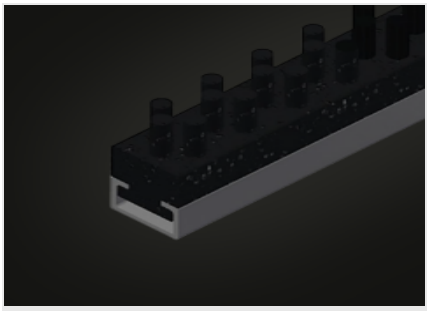

Brush strip (Optional)

Supporting surfaces with brush strip

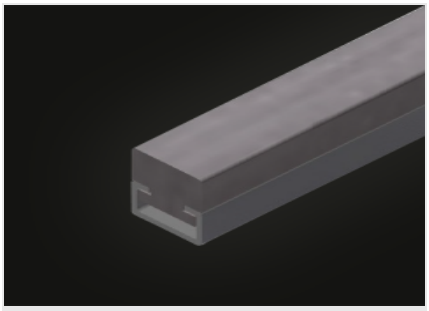

Felt strip (Optional)

Supporting surfaces with felt strip

Voilàp S.p.A.
Via Archimede, 10
41019 - Limidi di Soliera (MO)
ITALY

Tel 059 895411
Fax: 059 859404
P.IVA e C.F. 02057270361
info@somecopvc.com
www.somecopvc.com

The right to make technical alterations is reserved.

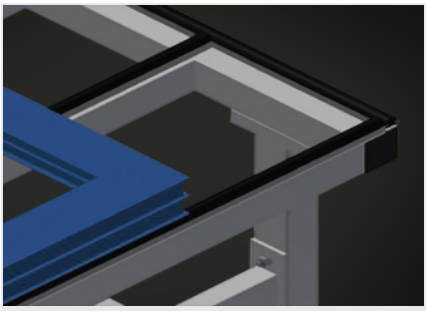

Rubber strips (Optional)

Supporting surfaces with rubber-knob profile

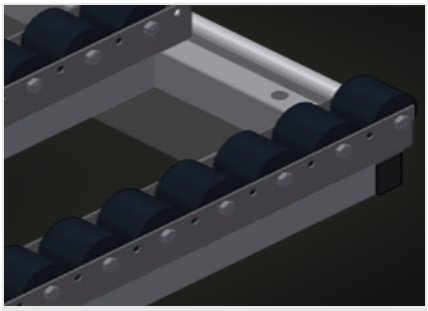

Roller support cmpl. (Optional)

Hard plastic rollers with polyamide coating, on plain bearings, load per roller 60 kg, convenient for transport and handling of PVC elements

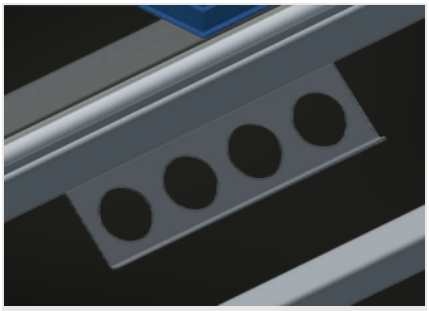

Tool rack (Optional)

Tool rack for pneumatic or electrical tools

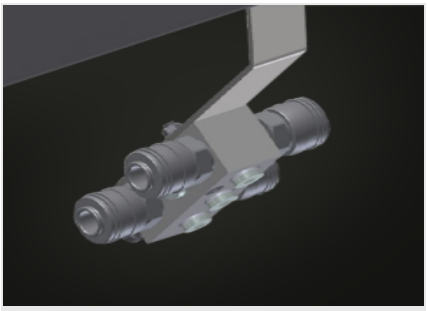

4-fold compressed air connection (Optional)

4-fold compressed air connection for connecting compressed-air tools

Voilàp S.p.A.
Via Archimede, 10
41019 - Limidi di Soliera (MO)
ITALY

Tel 059 895411
Fax: 059 859404
P.IVA e C.F. 02057270361
info@somecopvc.com
www.somecopvc.com

The right to make technical alterations is reserved.

HT 2045 L / ASSEMBLY TABLES

DIMENSION AND WEIGHT

Length (mm)	2.850
Width (mm)	1.300
Height (mm)	850 ÷ 1.000
Weight (kg)	100

SUPPORTING SURFACE

Adjustable height	●
Storage tray for setting down tools and accessories	●
Table supporting surface with plastic slide bars	●
Table brush strip supporting surface	○
Table felt profile strip supporting surface	○
Table rubber knob profile	○
Roller support	○

CHARACTERISTICS

Tool holder	○
Storage tray	○
4-fold compressed air supply	○

Included ● Available ○

Voilàp S.p.A.
Via Archimede, 10
41019 - Limidi di Soliera (MO)
ITALY

Tel 059 895411
Fax: 059 859404
P.IVA e C.F. 02057270361
info@somecopvc.com
www.somecopvc.com

The right to make technical alterations is reserved.