AW 1100

Transport and trolleys

Rack for providing a sorted selection of cut-to-length reinforcement profiles. Stable steel construction. Vertical storage of steel profiles. Compact outside dimensions. Well-organised arrangement of fixed-length profiles. Transportable with forklift truck.

Voilàp S.p.A.
Via Archimede, 10
41019 - Limidi di Soliera (MO)
ITALY

Tel 059 895411
Fax: 059 859404
P.IVA e C.F. 02057270361
info@somecopvc.com
www.somecopvc.com

The right to make technical alterations is reserved.

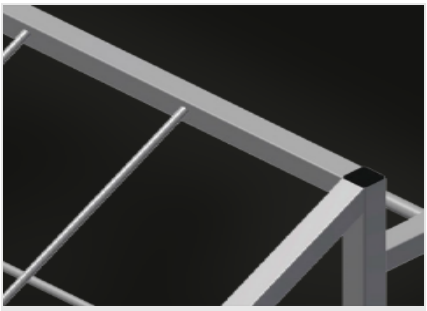

Compartments

20 compartments, 200 x 200 mm

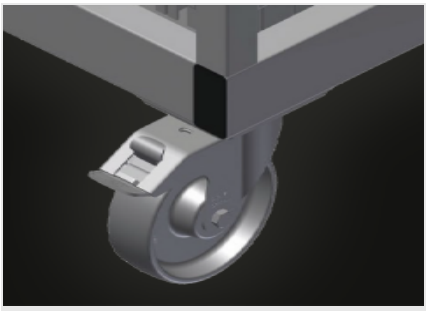

Casters, cmpl.

Two casters with brake and two fixed rollers provide mobility in all directions, roller diameter 125 mm

Voilàp S.p.A.
Via Archimede, 10
41019 - Limidi di Soliera (MO)
ITALY

Tel 059 895411
Fax: 059 859404
P.IVA e C.F. 02057270361
info@somecopvc.com
www.somecopvc.com

The right to make technical alterations is reserved.

AW 1100 / TRANSPORT AND TROLLEYS

DIMENSION AND WEIGHT

Length (mm)	1.100
Width (mm)	900
Height (mm)	1.100
Weight (kg)	80

STORAGE CAPACITY

Compartments	20
Load capacity (kg)	600

CHARACTERISTICS

Mobile as trolley (Two swivel casters with locking stop and two fixed casters - Castors diameter 125 mm)	○

Included ● Available ○

Voilàp S.p.A.
Via Archimede, 10
41019 - Limidi di Soliera (MO)
ITALY

Tel 059 895411
Fax: 059 859404
P.IVA e C.F. 02057270361
info@somecopvc.com
www.somecopvc.com

The right to make technical alterations is reserved.