GF 171

Complementary machines

The handle hole drilling unit with three-spindle drilling head and automatic feed allows working in two planes without material reclamping. The special suspension of the copying lever guarantees precise milling with low effort and compact design. This unit is adjustable in height. Door machining possible. Copy routing according to side stops or template in 1:1 ratio, simple template production. Pneumatic two-stage copying pin for two different milling diameters. Easy tool change due to "spindle lock". The machine is equipped as standard with a pneumatic horizontal material clamping device, a pneumatic copying pin on the left, a blank copying template and a D=8mm collet.

Voilàp S.p.A.
Via Archimede, 10
41019 - Limidi di Soliera (MO)
ITALY

Tel 059 895411
Fax: 059 859404
P.IVA e C.F. 02057270361
info@somecopvc.com
www.somecopvc.com

The right to make technical alterations is reserved.

GF 171 / COMPLEMENTARY MACHINES

LAYOUT

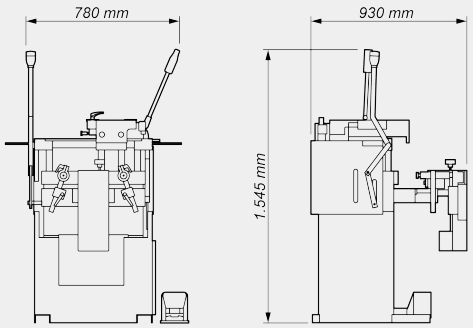

The overall dimensions may vary depending on the product configuration.

WORK AREA

Horizontal milling range after stop (mm)	300 x 120
Horizontal milling range according to copy template (mm)	285 x 110
Clamping range of the profiles with drilling unit (mm)	150 x 130
Milling stroke (mm)	105
Three-spindle drill head height adjustment (vertical mm)	40

DIMENSION AND WEIGHT

Width (mm)	780
Depth (mm)	930
Height (mm)	1.545
Weight (kg)	230

Voilàp S.p.A.
Via Archimede, 10
41019 - Limidi di Soliera (MO)
ITALY

Tel 059 895411
Fax: 059 859404
P.IVA e C.F. 02057270361
info@somecopvc.com
www.somecopvc.com

The right to make technical alterations is reserved.

MOTORS

Three-phase asynchronous motors	2
Milling motor power (KW)	0,74
Milling motor speed 50Hz (r.p.m.)	2.800
Milling motor speed 60Hz (r.p.m.)	3.400
Drilling motor power (KW)	1,05
Drilling motor speed 50Hz (r.p.m.)	2.800
Drilling motor speed 60Hz (r.p.m.)	3.400
Vertical milling spindle speed 50Hz (r.p.m.)	12.000
Vertical milling spindle speed 60Hz (r.p.m.)	14.400
Horizontal drilling spindle (three-spindle) speed 50Hz (r.p.m.)	750
Horizontal drilling spindle (three-spindle) speed 60Hz (r.p.m.)	900

TOOLS

Collets for milling cutter diameter (mm)	5 - 10
Collet Ø 8 mm	1
2-stage copying pin diameter (mm)	5 / 8
Diameter of drill bit with M10 threaded hole (the 2 outer drill bits are clockwise) (mm)	8 - 13
Diameter of drill bit with M10 threaded hole (the middle drill bit is left-turning) (mm)	8 - 15
Copying pin left	●
Second copying pin right	○
Blank copying template	●

EQUIPMENT

Roller conveyor (only GF 171/00)	○
Connecting plate roller conveyor / measuring system (only GF 171/00)	○
Vertical clamping device	○
Horizontal clamping device	●

Voilàp S.p.A.
Via Archimede, 10
41019 - Limidi di Soliera (MO)
ITALY

Tel 059 895411
Fax: 059 859404
P.IVA e C.F. 02057270361
info@somecopvc.com
www.somecopvc.com

The right to make technical alterations is reserved.

ELECTRICAL CONNECTION

Connected load (KW)	0,74 - 1,05
Maximum backup fuse 240V 60Hz (A)	15
Maximum backup fuse 400V 50Hz (A)	10

PNEUMATIC CONNECTION

Pressure (bar)	7
Hose connection	DN10
Compressed air consumption (7 bar) per working cycle (without spraying) (l)	12

Included ● Available ○

Voilàp S.p.A.
Via Archimede, 10
41019 - Limidi di Soliera (MO)
ITALY

Tel 059 895411
Fax: 059 859404
P.IVA e C.F. 02057270361
info@somecopvc.com
www.somecopvc.com

The right to make technical alterations is reserved.