PWW 4000

Transport and trolleys

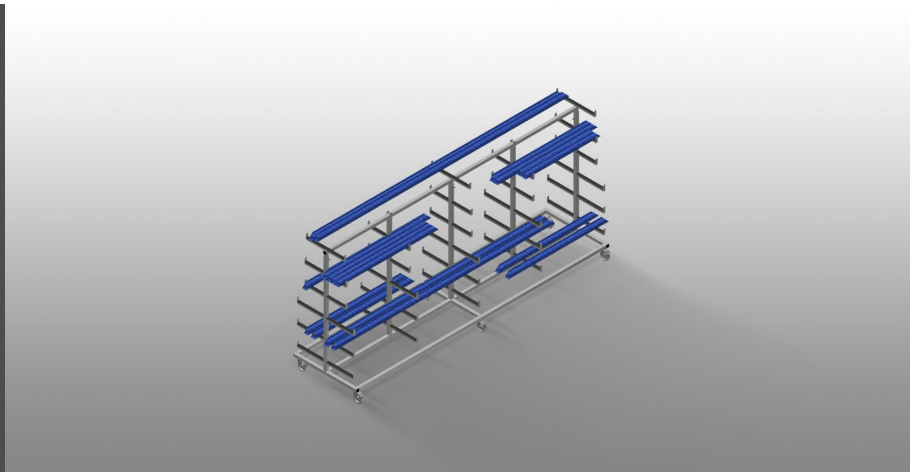

Profile trolley for horizontal storage and transportation of profiles. Stable steel construction. Horizontal profile transportation. Easy transportation of profile raw materials and cut-to-size profiles. Support arms are rubber coated. Profile trolley with profile supports on both sides. Six supports per upright. Three centre uprights. Six swivel castors, two of which with locking stop.

Voilàp S.p.A.
Via Archimede, 10
41019 - Limidi di Soliera (MO)
ITALY

Tel 059 895411
Fax: 059 859404
P.IVA e C.F. 02057270361
info@somecopvc.com
www.somecopvc.com

The right to make technical alterations is reserved.

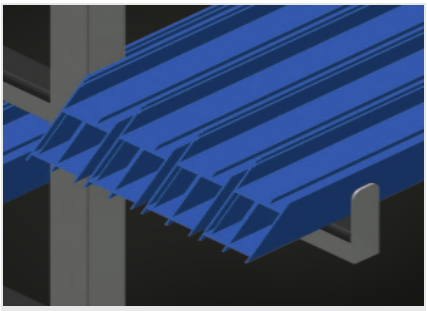

Easy loading and unloading

Well-organised storage provides quick access

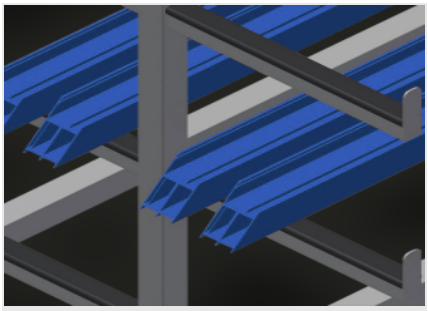

Support arms

Support arms are rubber coated.Adjustable centre upright

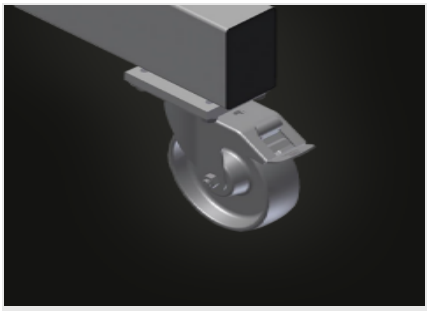

Casters

Four casters, two of which have a fixing brake, provide a high degree of mobility and easy, safe handling

Voilàp S.p.A.
Via Archimede, 10
41019 - Limidi di Soliera (MO)
ITALY

Tel 059 895411
Fax: 059 859404
P.IVA e C.F. 02057270361
info@somecopvc.com
www.somecopvc.com

The right to make technical alterations is reserved.

PWW 4000 / TRANSPORT AND TROLLEYS

DIMENSION AND WEIGHT

Length (mm)	4.000
Width (mm)	1.000
Height (mm)	1.960
Weight (kg)	130

STORAGE CAPACITY

Shelves	11
Clearance (mm)	260
Lower shelf width (mm)	420
Upper shelf width (mm)	300
Load capacity (kg)	500

CHARACTERISTICS

Centre upright	3
Swivel castors	6
Swivel castors with locking stop	2
Swivel castors diameter (mm)	125

Included ● Available ○

Voilàp S.p.A.
Via Archimede, 10
41019 - Limidi di Soliera (MO)
ITALY

Tel 059 895411
Fax: 059 859404
P.IVA e C.F. 02057270361
info@somecopvc.com
www.somecopvc.com

The right to make technical alterations is reserved.